TECH RIDER

STAGE PLOT & INPUT LIST

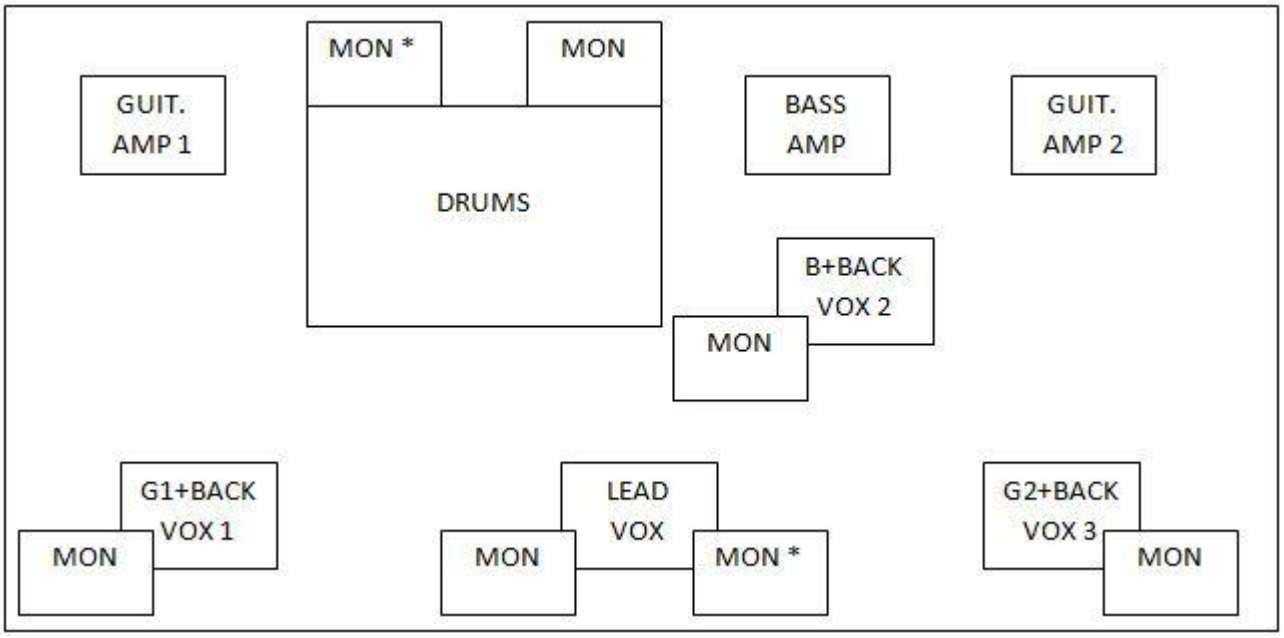

*Optional (if available)

GUIT. AMP 1: Orange TH30 head with Marshall 4x12 cab
GUIT. AMP 2: Vox AC30CCH head with Vox 4x12 cab
BASS AMP: Ampeg SVT-CL head with Ampeg 4x10 cab
DRUMS: Tama Starclassic Maple

If the venue has cabs available for use, the guitar cabs must have impedance at 8 or 16 Ohms and the bass cab must have impedance at 4 Ohms.

The band requires:

- FOH sound engineer
- 3x mic stand with boom-arm for BACK VOX 1, BACK VOX 2 and BACK VOX 3
- 3x vocal mic for BACK VOX 1, BACK VOX 2 and BACK VOX 3
- 4x XLR-XLR cable for vocal mics
- DI input for BASS AMP and/or 1 mic for cabinet
- 2x guitar mic for GUIT. AMP 1 and GUIT. AMP 2
- 7x drum mic
  - Kick
  - Tom 1
  - Tom 2 (Floor)
  - Snare
  - 2x stereo overheads
  - Hi-hat
- 1x 220v power outlet behind GUIT. AMP 1
- 2x 220v power outlet behind BASS AMP and GUIT. AMP 2
- 2x 220v power outlet in front of G1 + BACK VOX 1 (for guitar pedals)
- 2x220v power outlet in front of B + BACKVOX 2 (for bass pedals)
- 1x 220v power outlet in front of G2 + BACK VOX 3 (for guitar pedals)

The band provides:

- All backline gear
- Mic and mic stand for LEAD VOX
- All jack-jack cables for connecting instruments, pedalboards and amps
- Stands for guitars and basses

CONTACT INFO

If there are any questions regarding this document, please feel free to contact:

Oliver Søe Kristensen
24 45 98 39
theramblingvibes@gmail.com